Akuvox
Open A Smart World

VC50B
Quick Guide

Unpacking

Before using the device, check the device model and ensure that the shipped box includes the following items:

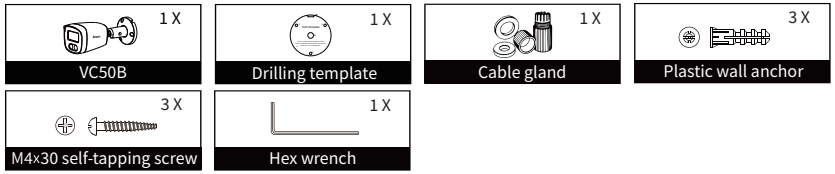

Product Overview

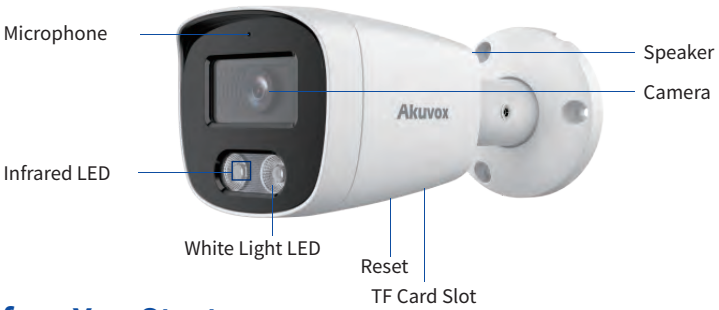

Before You Start

Tools needed

(not included in shipped box)

- Cat Ethernet Cable
- Crosshead Screwdriver
- Electric Drill

Voltage and Current Specifications

- It is suggested that use PoE or 12V DC/1A power adapter to power on device.

AWG Sizes and Properties Table

Please follow the properly wire data to install device:

Power Supply	12V DC/1A			
AWG	20	22	24	26
Resistance(ohm/km)	33.9	48.5	79.6	128
Cross-sectional Area(mm^2)	0.5189	0.3247	0.2047	0.14
Wire Length(m)	⩽50	⩽40	⩽30	⩽15

Requirements

1. Place the device away from sunlight and light sources to prevent potential damage.
2. Do not place the device in the high-temperature, and humid environments or in surroundings impacted by magnetic field.
3. Install the device on the flat surface securely to avoid personal injuries and property loss caused by device' s falling.
4. Do not use or place the device near heating objects.
5. If installing the device indoors, please keep device at least 2 meters away from light, and at least 3 meters away from window and door.

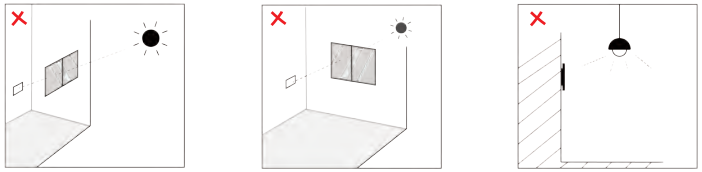

Direct sun through window | Indirect sunlight through window | Close to light

⚠ Warning!

1. To ensure safety, avoid touching power cord, power adapter, and device with wet hands, bending or pulling the power cord, damaging any components, and use only qualified power adapter and power cord.
2. Be careful that standing up on the area under the device in case of personal injuries cause by hitting the device.

⚠ Caution

1. Do not knock device with hard objects.
2. Do not press down hard on the device screen.
3. Do not expose device to chemical products, such as alcohol, acid liquid, disinfectants, and so on.
4. To prevent the device installation from becoming loose, ensure accurate diameters and depths of screw holes. If the screw holes are too large, use glue to secure the screws.
5. Use wet cloth clean device surface softly, and then wipe the surface with dry cloth for cleaning the device.
6. If there is abnormal situation of the device, including uncommon sound and smell, please power off the device and contact Akuvox Technical Team immediately.

Akuvox
Open A Smart World

VC50B
Quick Guide

Wiring Interface

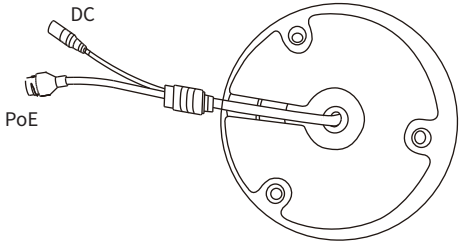

Installation

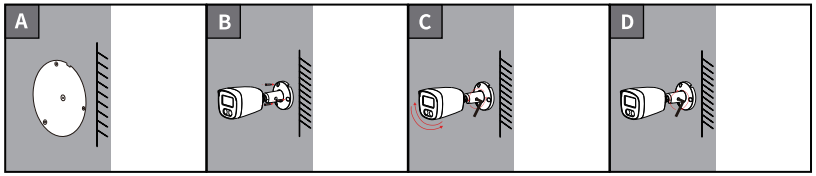

- ▪ Attach the **drilling template** onto the installation surface.
  ▪ Drill three screw holes at the positions marked "1".
  ▪ Insert three **plastic wall anchors** into the drilled holes.
- Use three **M4x30 self-tapping screws** to fix the camera on the wall.
- Unscrew the locking screw slightly and rotate the camera to achieve the desired field of view.
- ▪ Use **Allen wrench** to tighten the screw securely for securing the camera in position.
  ▪ Complete the installation.

Application Network Topology

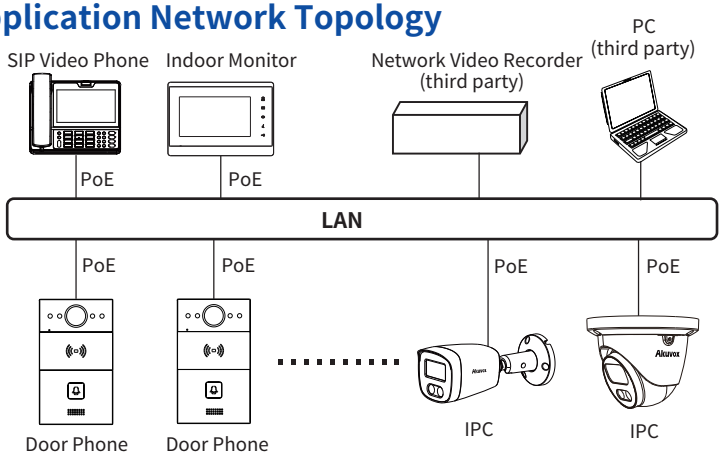

Device Test

Please verify the device status after installation:

- Use the IP Scanner to confirm that the camera is online. Log in to the web portaland verify that the live video is displayed properly.

Operation

Unscrew the two screws to remove the protective cover of Reset Button, then press and hold the Reset button for **5 seconds** to restore the device to factory settings.

NOTICE:
Quick guide can be viewed on Global Visions website.

Global Visions

GLOBAL VISIONS INC.
877-725-8869
www.globalvisionsinc.com